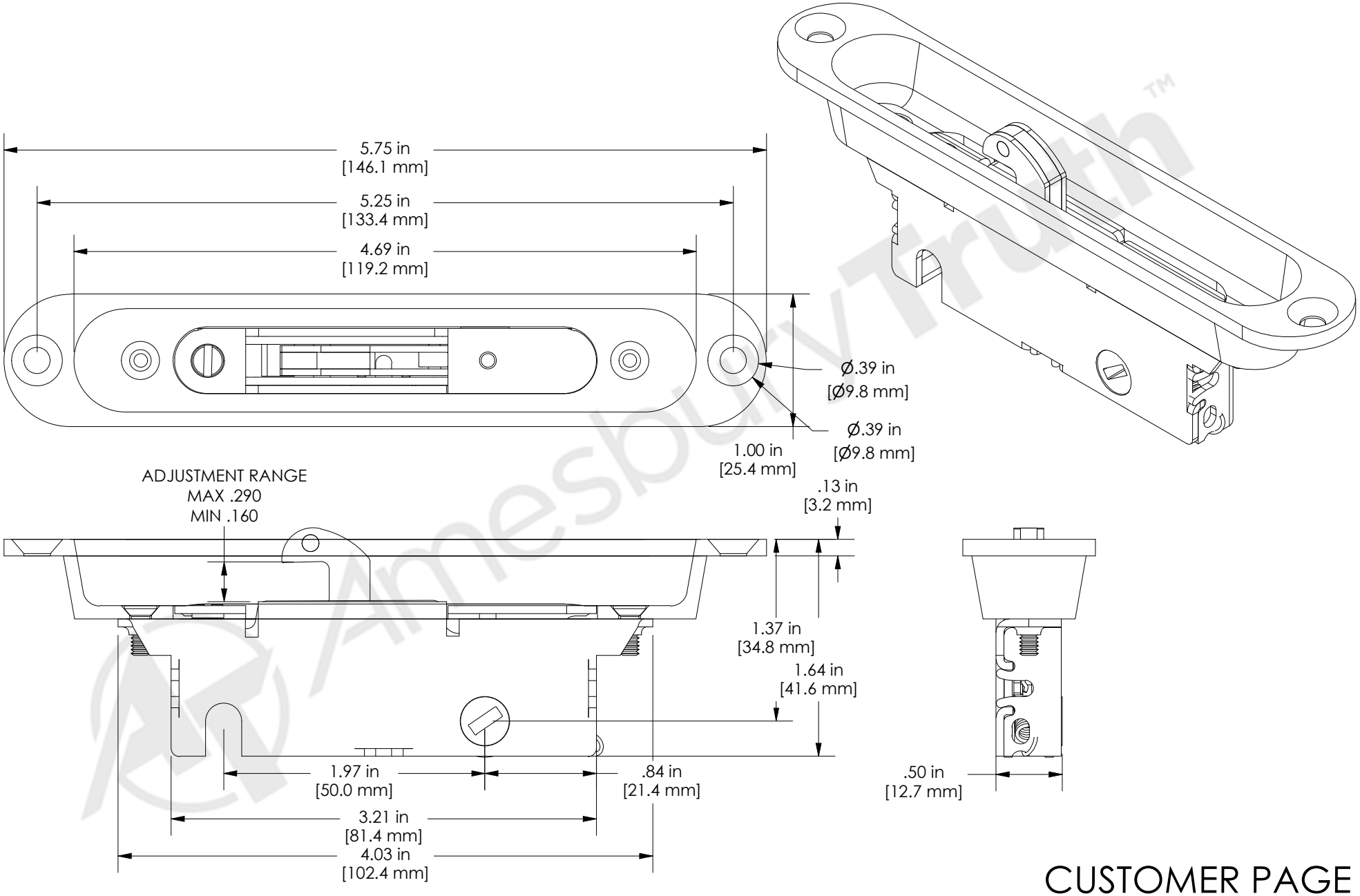

CUSTOMER PAGE

AmesburyTruth™

Engineered Solutions. Trusted Results.

THE INFORMATION CONTAINED IN THIS DRAWING IS CONFIDENTIAL AND PROPRIETARY. THIS DRAWING IS NOT TO BE COPIED OR REPRODUCED IN WHOLE OR IN PART WITHOUT EXPRESS WRITTEN PERMISSION.

INTERPRET PER: ASME Y14.5M-2009

UNITS: INCH

THIRD ANGLE PROJECTION

DRAWING TITLE: DEADLATCH ASSEMBLY

SCALE: 1 : 1

SHEET 1 OF 1

PART #: 597